ROCKER OUTER PANEL (CUT-P)

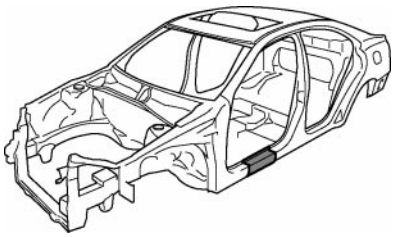

F25900A

Symbol meaning

: Remove Weld Points : Cut and Join Location

: Cut Location for Supply Parts

F25900B

REMOVAL

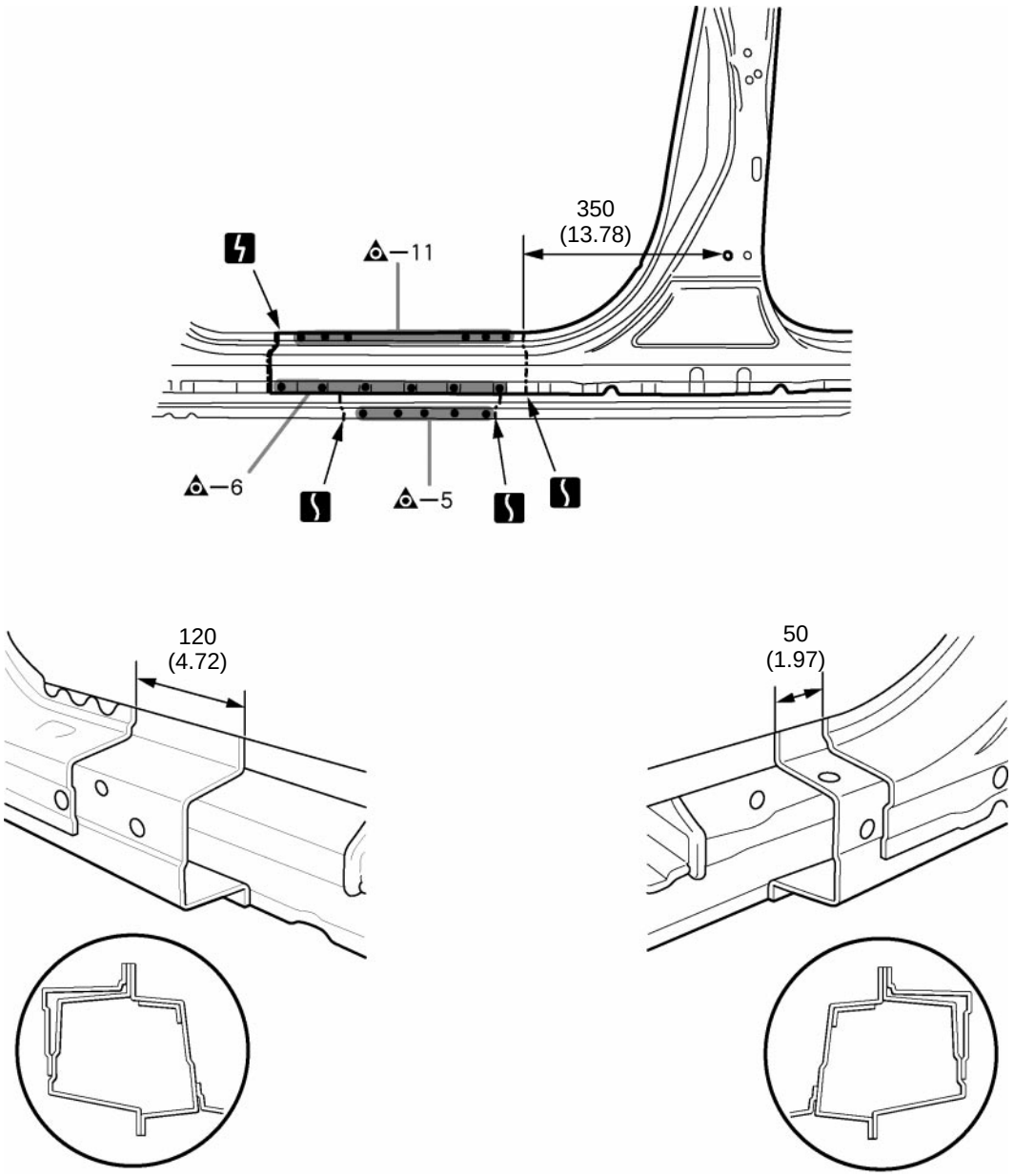

mm (in.)

F25900

Symbol meaning

: MIG Plug Weld : Butt Weld

F25901B

INSTALLATION

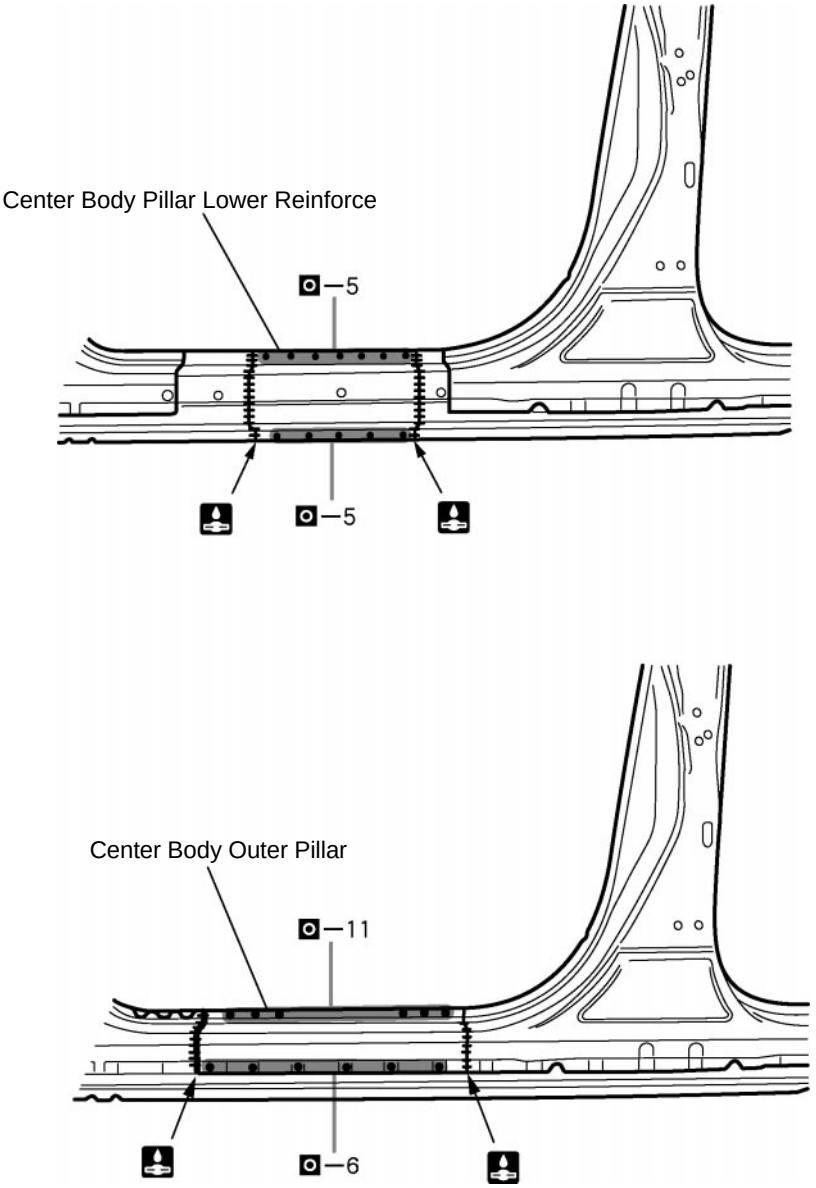

F25901

INSTALLATION POINT

1 Inspect the fitting of the related parts around the new parts before welding. This affects the appearance of the finish.
2 Temporarily install the new parts and measure each part of the new parts in accordance with the body dimension diagram. (See the body dimension diagram)
3 After welding, apply body sealer to the corresponding parts. (See the paint·coating)
4 After welding the center body pillar lower reinforce to the vehicle side, install the center body outer pillar.
5 After applying the top coat, apply anti-rust agent to the internal panel portion of the closed section structural weld points.